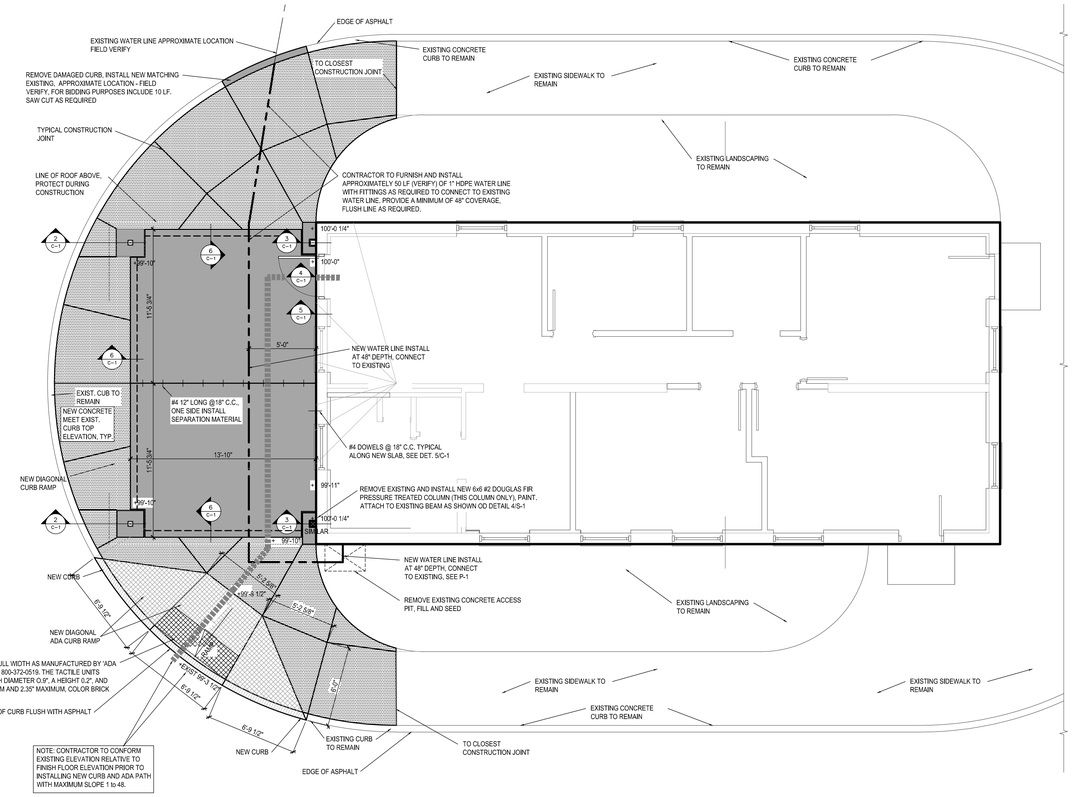

LEGEND

- EXISTING SIDEWALK TO REMAIN
- NEW SIDEWALK, 5" CONCRETE SLAB WITH / WWF6x6 W1.4 x W1.4 (FLAT SHEETS ONLY). INSTALLED ON COMPACTED 4" GRAVEL. NEW SLAB SHALL MEET ELEVATION OF EXISTING CURB.
- PORCH NEW 5" CONCRETE SLAB WITH / WWF6x6 W1.4xw1.4 (FLAT SHEETS ONLY). WITH 2 SIDES TURNED-DOWN 2" AND SECURE TO BUILDING WITH DOWELS. SEE SHEET C-1 FOR DETAILS.
- NEW DIAGONAL CURB RAMP. 5" CONCRETE SLAB WITH / WWF6x6 W1.4 x W1.4 (FLAT SHEETS ONLY). INSTALLED ON COMPACTED 4" GRAVEL. NEW SLAB SHALL MEET ELEVATION OF EXISTING CURB.
- RAMP DETECTABLE WARNINGS
- EXISTING CURB TO REMAIN
- NEW CURB FOR RAMP (REMOVE EXISTING)
- NEW CURB REPLACING EXISTING DAMAGED SECTION. VERIFY LOCATION
- NEW WATER LINE
- EXISTING WATER LINE

ADA DETECTABLE WARNING 24" DEPTH & FULL WIDTH AS MANUFACTURED BY 'ADA SOLUTION, INC' WWW.ADATILE.COM PHONE 800-372-0519. THE TACTILE UNITS SHALL BE RAISED TRUNCATED DOMES WITH DIAMETER 0.9", A HEIGHT 0.2", AND CENTER-TO-CENTER SPACING 1.67" MINIMUM AND 2.35" MAXIMUM. COLOR BRICK RED.

SITE PLAN ALTERNATE #1 (1 / C-1)

NOTE: FIELD VERIFY EXISTING CONDITIONS AND DIMENSIONS. PATCH ASPHALT AS REQUIRED TO ACCOMMODATE CURB INSTALLATION.

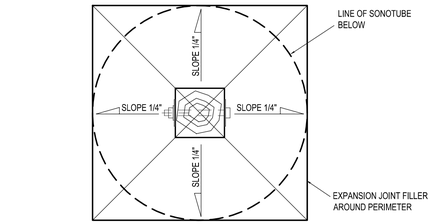

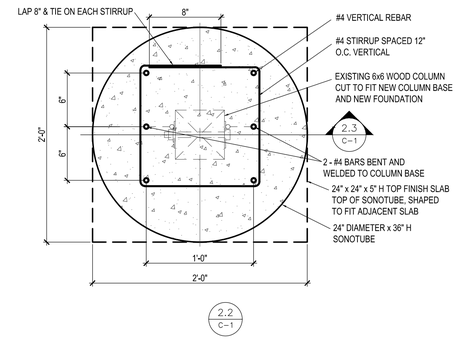

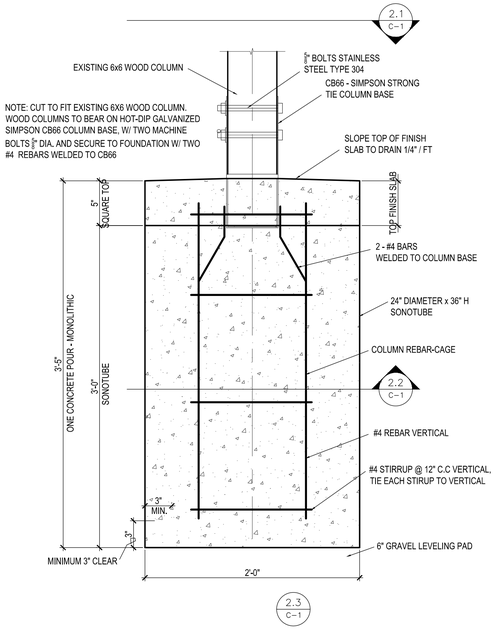

DETAIL ALTERNATE #1 (2 / C-1)
OUTLYING COLUMN BASE 1-1/2" = 1'-0"

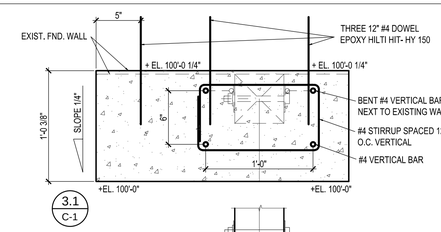

GENERAL NOTE:
SOUTH-EAST COLUMN TO BE REPLACED ENTIRELY.
THREE REMAINING COLUMN CUT TO FIT.
PROVIDE TEMPORARY SHORING AS REQUIRED.

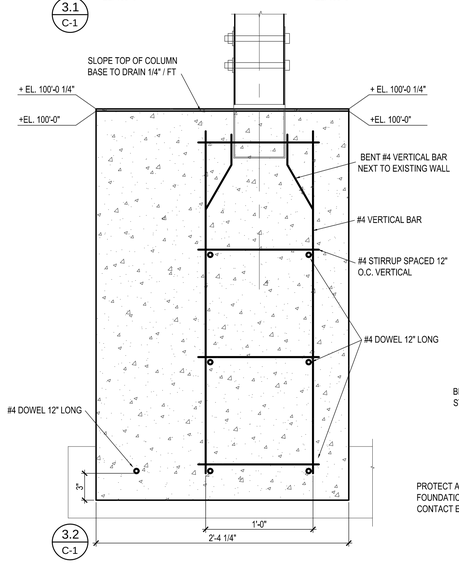

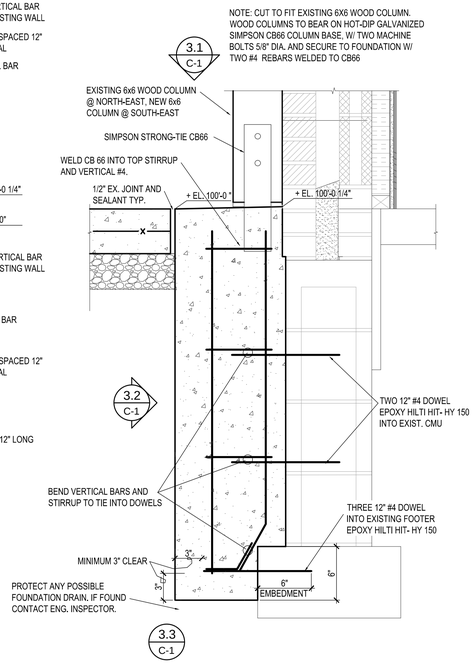

DETAIL ALTERNATE #1 (3 / C-1)
INBOARD COLUMN BASE 1-1/2" = 1'-0"

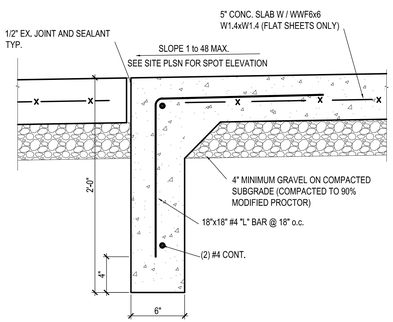

DETAIL ALTERNATE #1 (6 / C-1)
1-1/2" = 1'-0"

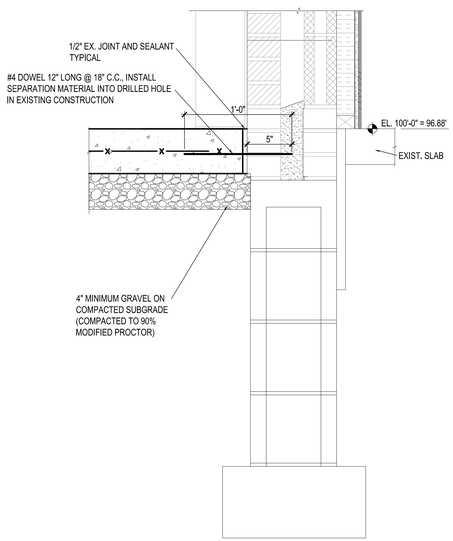

DETAIL ALTERNATE #1 (5 / C-1)
1-1/2" = 1'-0"

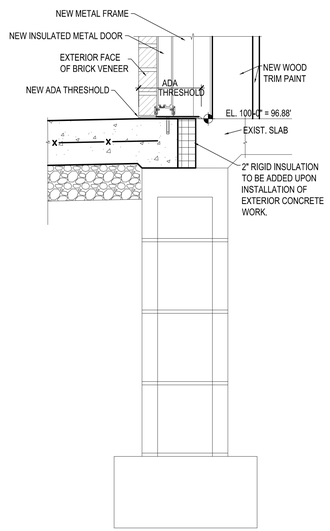

DETAIL ALTERNATE #1 (4 / C-1)
1-1/2" = 1'-0"

LARRY D. WAYLAND REGISTERED No. 17515 STATE OF INDIANA PROFESSIONAL ENGINEER

Certified by:

CROSLEY FISH & WILDLIFE OFFICE
OFFICE REMODELING
INDIANA DEPT. OF NATURAL RESOURCES
2010 South State Road 3
NORTH VERNON, IN 47265 - 7950

STATE OF INDIANA
DEPARTMENT OF NATURAL RESOURCES
DIVISION OF ENGINEERING
ROOM W296 INDIANA GOVERNMENT CENTER SOUTH
402 WEST WASHINGTON STREET
INDIANAPOLIS, INDIANA 46204
TEL 317-232-4150, FAX 317-233-1205

Revisions:

Project Number: ENG1902899363
Requisition Number: 102570
Designer: L. W., B.D.
Drawing Date: 03-29-2019
Drafter: B.D.
Drawing Scale: AS NOTED
DNR Approval:
Client Approval:
File Number: 092 - 027
Drawing Number: C-1
Sheet: of